GEK-34053G

INSTRUCTIONS

TIME OVERCURRENT RELAYS

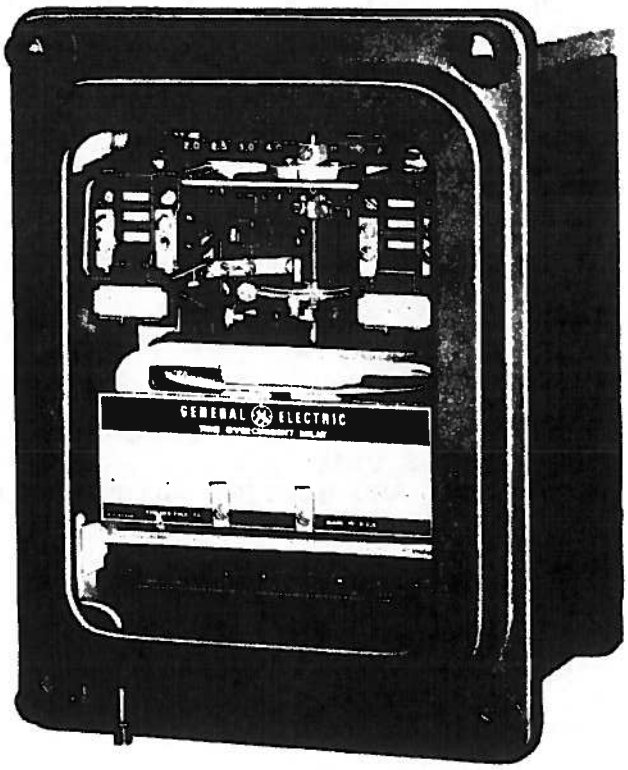

TYPES

IAC51A FORM 800 AND UP
IAC51B FORM 800 AND UP
IAC52A FORM 800 AND UP
IAC52B FORM 800 AND UP

GENERAL ELECTRIC

TABLE OF CONTENTS

	PAGE
DESCRIPTION	3
APPLICATION	4
CONSTRUCTION	4
RATINGS	5
TIME-OVERCURRENT UNIT	5
INSTANTANEOUS UNIT	6
TARGET AND SEAL-IN UNIT	7
CONTACTS	7
BURDENS	8
CHARACTERISTICS	9
RECEIVING, HANDLING, AND STORAGE	9
ACCEPTANCE TESTS	9
VISUAL INSPECTION	10
MECHANICAL INSPECTION	10
ELECTRICAL TESTS	10
DRAWOUT RELAYS, GENERAL	10
POWER REQUIREMENTS, GENERAL	11
TIME-OVERCURRENT UNIT	11
TIME SETTING	11
PICKUP TEST	12
TIME TEST	12
INSTANTANEOUS UNIT	12
SETTING THE INSTANTANEOUS UNIT	12
PICKUP TEST	12
TARGET AND SEAL-IN UNIT	13
PICKUP AND DROPOUT TEST	13
INSTALLATION	14
TIME-OVERCURRENT UNIT	14
TARGET AND SEAL-IN UNIT	14
INSTANTANEOUS UNIT	14
PERIODIC CHECKS AND ROUTINE MAINTENANCE	15
TIME OVERCURRENT UNIT	15
INSTANTANEOUS UNIT	15
TARGET AND SEAL-IN UNIT	15
CONTACT CLEANING	15
SYSTEM TEST	15
SERVICING	16
TIME-OVERCURRENT UNIT	16
PICKUP TESTS	16
TIME TESTS	17
INSTANTANEOUS UNIT	17
TARGET AND SEAL-IN UNIT	18
RENEWAL PARTS	18
LIST OF FIGURES	19

(Cover photo 8041316)

TIME OVERCURRENT RELAYS

DESCRIPTION

The Type IAC51 and IAC52 relays are single-phase, current-operated, AC devices with inverse time/current characteristics. They are utilized to protect commercial, industrial, and utility power distribution systems against either multi-phase or phase-to-ground faults.

Each relay consists of a basic induction-disk time-overcurrent unit, and a dual-rated target/seal-in unit, and may include a hinge-type instantaneous-overcurrent unit. Both the time-overcurrent unit and the instantaneous unit are adjustable over a range of about 8 to 1. The available ranges in amperes of both units, as well as information on their continuous rating, contact rating, and target/seal-in unit tap ratings are given in the section on **RATINGS**.

A standard S1 case is used to mount each relay. The outline and mounting dimensions of this case are shown in Figure 12.

The basic differences between the relays covered by these instructions are noted in the following table:

TYPE	INSTANTANEOUS UNIT	CONTACT CIRCUIT	INTERNAL CONNECTIONS
IAC51A	NO	1	FIGURE 4
IAC51B	YES	1	FIGURE 5
IAC52A	NO	2	FIGURE 6
IAC52B	YES	2	FIGURE 7

These instructions do not purport to cover all details or variations in equipment nor provide for every possible contingency to be met in connection with installation, operation or maintenance. Should further information be desired or should particular problems arise which are not covered sufficiently for the purchaser's purposes, the matter should be referred to the General Electric Company.

To the extent required the products described herein meet applicable ANSI, IEEE and NEMA standards; but no such assurance is given with respect to local codes and ordinances because they vary greatly.

APPLICATION

The inverse time-current characteristics make the IAC51 and IAC52 relays well suited for multi-phase and phase-to-ground fault protection of commercial, industrial, and utility distribution systems, and frequently for overload back-up protection. They are particularly well suited for application in locations where the fault-current magnitude is dependent mainly upon the location of the fault relative to the relay and only slightly upon the system generating setup at the time of the fault.

The general practice is to use a set of three relays for interphase faults and a separate relay, residually connected, for single-phase-to-ground faults. Use of a separate ground relay is advantageous because it can be adjusted to provide more-sensitive protection on ground faults. Typical connections for such an application are shown in Figure 14.

A typical application and external connections of the IAC52A, which has two closing contacts, is shown in Figure 15. Care should be taken in applying this relay, since simultaneous closing of both contacts may not occur.

In the application of IAC51 and 52 relays with automatic reclosing devices, the reset time should be considered. The reset time of all relays covered by these instructions is approximately seven seconds (7 secs), from the fully-closed to the fully-open position, when set at number 10 on the time dial.

When setting these relays to coordinate with "downstream" relays, a coordination time of from 0.25 to 0.40 second is generally allowed. These coordination times include, in addition to breaker-clearing time, 0.10 second for relay overtravel and 0.17 second for safety factor. For example, if the breaker-clearing time is 0.13 second (8 cycles), the coordination time would be 0.40 second. If the relay operating time is set by test at the current level in question, the safety factor may be reduced from 0.17 to 0.07 second with relay overtravel of .10 second. Then if the "downstream" breaker time is 5 cycles (0.08 sec) a minimum of 0.25 second could be allowed for coordination.

CONSTRUCTION

The induction unit is the basic unit in all Type-IAC relays. Figures 2 and 3 show the induction unit mounted in the cradle. These units are of the induction-disk construction type. The disk is actuated by a current-operating coil on a laminated U-magnet. The disk shaft carries the moving contact, which completes the alarm or trip circuit when it touches the stationary contact or contacts. The disk shaft is restrained by a spiral spring to give the proper contact-closing current, and its motion is retarded by a permanent magnet acting on the disk to give the correct time delay.

There is a target and seal-in unit mounted on the front, to the left of the shaft of the time-overcurrent unit. The seal-in unit has its coil in series and its contacts in parallel with the contacts of

the time-overcurrent unit, such that when the induction-unit contacts close, the seal-in unit picks up and seals in. When the seal-in unit picks up, it raises a target into view, which latches up and remains exposed until released by pressing a button beneath the lower left corner of the cover.

The instantaneous unit is a small hinge-type unit, which is mounted on the front of the B models to the right of the shaft of the time-overcurrent unit. Its contacts are normally connected in parallel with the contacts of the time-overcurrent unit and its coil is connected in series with the time-overcurrent unit. When the instantaneous unit picks up it raises a target, which latches up and remains exposed until it is released. The same button that releases the target of the seal-in unit also releases the target of the instantaneous unit.

RATINGS

TIME-OVERCURRENT UNIT

Ratings for the time-overcurrent unit are shown in Table I.

TABLE I

RELAY	FREQUENCY CYCLES	PICKUP RANGE, AMPERES	
		MAIN (TIME) UNIT	INSTANTANEOUS UNIT
IAC51A and IAC52A	50 60	0.5 - 4.0 2.0 - 16.0	
IAC51B and IAC52B	50 60	0.5 - 4.0 2.0 - 16.0	0.5 - 4.0 2.0 - 16.0 10.0 - 80.0 20.0 - 160.0

Available taps of the time-overcurrent unit are shown on Table II.

TABLE II

RANGE, AMPERES	TAPS AVAILABLE (AMPERES)
0.5 - 4.0	0.5, 0.6, 0.7, 0.8 1.0, 1.2, 1.5, 2.0, 2.5, 3.0, 4.0
2.0 - 16	2.0, 2.5, 3.0, 4.0, 5.0, 6.0, 7.0, 8.0, 10.0, 12.0,

The one-second thermal ratings are listed in Table III.

TABLE III

TIME OVERCURRENT UNIT (AMPS)	ONE SECOND RATING(AMPS)	K
0.5 - 4.0	70.0	4,900.0
2.0 - 16.0	260.0	67,600.0

For ratings for less than one second, the rating may be calculated according to the formula

$$I = \sqrt{\frac{K}{T}}$$

where T is the time, in seconds, that the current flows.

The continuous ratings of the time-overcurrent units are shown in Tables IV and V.

TABLE IV

0.5 - 4.0 AMP RANGE											
TAP	0.5	0.6	0.7	0.8	1.0	1.2	1.5	2.0	2.5	3.0	4.0
RATING	1.6	1.8	2.0	2.1	2.3	2.7	3.0	3.5	4.0	4.5	5.0

TABLE V

2.0 - 16.0 AMP RANGE											
TAP	2.0	2.5	3.0	4.0	5.0	6.0	7.0	8.0	10.0	12.0	16
RATING	8.0	9.0	10.0	12.0	14.0	15.0	16.0	17.5	20.0	20.0	20.0

INSTANTANEOUS UNIT

The instantaneous unit has a double-wound coil for operation on either one of two ranges. Any setting obtained in the lower range (series connected) is doubled, within ±10%, when the unit is connected for high-range operation (parallel connected).

The instantaneous unit has a continuous rating of 1.5 times minimum setting or 25 amperes, whichever is smaller. Example: the 2.0-16.0 ampere instantaneous unit, when set on the low range (2.0-8.0 amperes) has a continuous rating of 3.0 amperes, and when connected for high-range operation (4.0-16.0 amperes) has a continuous rating of 6.0 amperes. The continuous and one-second ratings for the instantaneous unit are shown in Table VI.

TABLE VI

RANGE	CONNECTIONS	††	CONTINUOUS RATING	† ONE SECOND	K
0.5 - 4.00	0.5 - 2.00	S	0.75	25.0	625
	1.0 - 4.00	P	1.5	50.0	2,500
2.0 - 16.0	2.0 - 8.00	S	3.0	130.0	16,900
	4.0 - 16.00	P	6.0	260.0	67,600
10.0 - 80.0	10.0 - 40.0	S	15.0	400.0	160,000
	20.0 - 80.0	P	25.0	600.0	360,000
20.0 - 160.0	20.0 - 80.0	S	25.0	600.0	360,000
	40.0 - 160.0	P	25.0	600.0	360,000

† Higher currents may be applied for shorter lengths of time in accordance with the formula

$$I = \sqrt{\frac{K}{T}}$$

where T is the time, in seconds, that the current flows.

†† S = Series connected, P = Parallel connected

TARGET AND SEAL-IN UNIT

Ratings for the target and seal-in unit are shown in Table VII

TABLE VII

	TAP	
	0.2	2.0
D.C. Resistance ± 10% (ohms)	7	0.13
Min. Operating (amperes) +0 - 25%	0.2	2.0
Carry Continuously (amperes)	0.3	3.0
Carry 30 Amps for (sec.)	0.03	4.0
Carry 10 Amps for (sec.)	0.25	30.0
60 Hz Impedance (ohms)	52.0	0.53

If the tripping current exceeds 30 amperes an auxiliary relay should be used, the connections being such that the tripping current does not pass through the contacts of the target and seal-in coils of the protective relay.

CONTACTS

The current-closing rating of the contacts is 30 amperes for voltages not exceeding 250 volts. The current-carrying rating is limited by the ratings of the seal-in unit.

BURDENS

Burdens for the time-overcurrent unit are given in Table VIII.

TABLE VIII

RANGE	HZ	MIN. TAP	BURDENS AT MIN. PICKUP MIN. TAP			BURDENS IN OHMS (Z)			V.A. AT 5 AMPS CALCULATED FROM IMPEDANCE AT MIN. PICKUP (I^2Z)
			R	Jχ	Z	3 TIMES PICK-UP	10 TIMES PICK-UP	20.0 TIMES PICK-UP	
0.5 - 0.4	60	0.5	5.60	21.0	22.0	10.80	5.00	3.66	550.0
2.0 - 15.0	60	2.0	0.37	1.44	1.45	0.65	0.32	0.24	36.3

NOTE: The impedance values given are those for the minimum tap of each relay. The impedance for other taps at pick up current (tap rating) varies inversely (approximately) as the square of the tap rating. For example, for a relay with 0.5-4.0 amp range, the impedance of the 0.5 amp tap is given as 22.0 ohms. The impedance of the 2.0 amp tap at 2.0 amperes is $(.5/2)^2 \times 22 = 1.37$ ohm.

The instantaneous unit burdens are listed in Table IX.

TABLE IX

RANGE 60 HZ RELAYS ONLY (AMPS)	†CONNECTIONS	MIN. TAP AMPS	BURDENS AT MIN. PICKUP MIN. TAP			BURDENS IN OHMS (Z)			V.A. AT 5 AMPS CALCULATED FROM IMPEDANCE AT MIN. PICKUP (I2Z)
			R OHMS	Jχ OHMS	Z OHMS	3 TIMES PICK UP	10 TIMES PICK UP	20.0 TIMES PICK UP	
0.5-4.0	LOW	0.5	12.7	11.5	17.1	9.6	8.7	8.2	427.5
	HIGH	1.0	3.18	2.87	4.28	2.40	2.18	2.04	107.0
2.0-16.0	LOW	2.0	0.76	0.72	1.05	0.59	0.53	0.50	26.25
	HIGH	4.0	0.189	0.180	0.261	0.147	0.133	0.125	6.63
10.0-80.0	LOW	10.0	0.042	0.029	0.051	0.029	0.026	0.024	1.28
	HIGH	20.0	0.010	0.007	0.013	0.007	0.007	0.006	0.33
20.0-160.0	LOW	20.0	0.015	0.008	0.017	0.010	0.009	0.008	0.43
	HIGH	40.0	0.004	0.002	0.004	0.002	0.002	0.002	0.10

† Low means two windings connected in series.
High means two windings connected in parallel.
See Internal-Connections diagram for additional information.

CHARACTERISTICS

Pickup of these relays is defined as the current required to close the contacts from the 0.5 time-dial position. The pickup value of the IAC51 relays is within 3% of tap value.

The setting of the time dial determines the length of time the unit requires to close its contacts when the current reaches the predetermined value. The contacts are just closed when the dial is set at zero. When the dial is set at 10, the disk must travel the maximum distance to close the contacts; this gives the maximum time setting. The unit resets at 90% of the minimum closing value of current.

The time to reset to the No. 10 time-dial position when the current is reduced to zero is approximately 7 seconds.

Figure 9 shows the 50 Hz and Figure 10 shows the 60 Hz time/current characteristics for relay types IAC51 and IAC52. The time/current curve for the instantaneous unit is shown on Figure 8.

RECEIVING, HANDLING, AND STORAGE

These relays, when not included as a part of a control panel, will be shipped in cartons designed to protect them against damage. Immediately upon receipt of a relay, examine it for any damage sustained in transit. If injury or damage resulting from rough handling is evident, file a damage claim at once with the transportation company and promptly notify the nearest General Electric Sales Office.

Reasonable care should be exercised in unpacking the relay in order that none of the parts are injured nor the adjustments disturbed.

If the relays are not to be installed immediately, they should be stored in their original cartons in a place that is free from moisture, dust, and metallic chips. Foreign matter collected on the outside of the case may find its way inside when the cover is removed and cause trouble in the operation of the relay.

ACCEPTANCE TESTS

Immediately upon receipt of the relay an **INSPECTION AND ACCEPTANCE TEST** should be made to make sure that no damage has been sustained in shipment and that the relay calibrations have not been disturbed. If the examination or test indicates that readjustment is necessary, refer to the section on **SERVICING.**

These tests may be performed as part of the installation or as acceptance tests, at the discretion of the user.

Since most operating companies use different procedures for acceptance and for installation tests, the following section includes all applicable tests that may be performed on these relays.

VISUAL INSPECTION

Check the nameplate stamping to make sure that the model number and rating of the relay agree with the requisition.

Remove the relay from its case and check that there are no broken or cracked molded parts or other signs of physical damage, and that all screws are tight.

MECHANICAL INSPECTION

1. There should be no noticeable friction when the disk is rotated slowly clockwise. The disk should return by itself to its rest position.

2. Make sure the control spring is not deformed, nor its convolutions tangled or touching.

3. The armature and contacts of the seal-in unit, as well as the armature and contacts of the instantaneous unit, should move freely when operated by hand; there should be at least 1/32" wipe on the seal-in contacts.

4. The targets in the seal-in unit and in the instantaneous unit must come into view and latch when the armatures are operated by hand, and should unlatch when the target release lever is operated.

5. Make sure that the fingers and shorting bars agree with the internal-connections diagram.

CAUTION

Every circuit in the drawout case has an auxiliary brush. It is especially important on current circuits and other circuits with shorting bars that the auxiliary brush be bent high enough to engage the connecting plug or test plug before the main brushes do. This will prevent Current Transformer (CT) secondary circuits from being opened. See Figure 1.

ELECTRICAL TESTS

DRAWOUT RELAYS, GENERAL

Since all drawout relays in service operate in their cases, it is recommended that they be tested in their cases or an equivalent steel case. In this way, any magnetic effects of the enclosure will be accurately duplicated during testing. A relay may be tested without removing it from the panel by using a 12XLA13A test plug. This plug makes connections only with the relay and does not disturb any shoring bars in the case. The 12XLA12A test plug may also be used. Although this test plug allows greater testing flexibility, it requires C.T. shorting jumpers and the exercise of greater care, since connections are made to both the relay and the external circuitry.

POWER REQUIREMENTS, GENERAL

All devices operating on alternating current (AC) are affected by frequency. Since non-sinusoidal waveforms can be analyzed as a fundamental frequency plus harmonics of that fundamental frequency, it follows that alternating-current devices (relays) will be affected by applied waveforms. AC relays (and AC devices in general) are significantly affected by the application of non-sinusoidal waveforms.

Therefore, in order to test AC relays properly it is essential to use a test voltage and/or current waveform that is sinusoidal. The purity of the sine wave (i.e., its freedom from harmonics) cannot be expressed as a finite number for any particular relay; however, any relay using tuned circuits, RL or RC networks, or saturating electromagnets (such as time-overcurrent relays) would be especially affected by non-sinusoidal wave forms.

TIME-OVERCURRENT UNIT

Rotate the time dial slowly and check, by means of a lamp in the circuit, that the contacts just close at the zero (0) time-dial setting.

The point at which the contacts just close can be adjusted by running the stationary contact brush in or out by means of its adjusting screw. This screw should be held securely in its support.

With the contacts just closing at No. 0 time-dial setting, there should be sufficient gap between the stationary contact brush and its metal backing strip to ensure approximately 1/32" wipe.

The minimum current at which the contacts will just close is determined by the position of the tap screw in the tap block at the top of the relay.

When changing the current setting with the relay in its case, remove the connection plug, to short the current-transformer secondary circuit. Next, screw the tap screws into the tap marked for the desired current, and then replace the connection plug.

The pickup of the unit for any current tap is adjusted by means of a spring-adjusting ring. See Figure 2. The ring may be turned by inserting a screw driver in the notches around the edge. By turning the ring, the operating current of the unit may be brought into agreement with the tap setting employed if, for some reason, this adjustment has been disturbed. This adjustment also permits any desired setting intermediate between the various tap settings to be obtained. The unit is adjusted at the factory to close its contacts from any time-dial position at a minimum current within five percent (5%) of the tap plug setting. The unit resets at 90% of the minimum closing value.

Time Setting

The setting of the time dial determines the length of time the unit requires to close its contacts when the current reaches a

predetermined value. The contacts are just closed when the dial is set on 0. When the dial is set on 10, the disk must travel the maximum amount to close the contacts; therefore this setting gives the maximum time setting.

The primary adjustment for the time of operation of the unit is made by means of the time dial. However, further adjustment is obtained by moving the permanent magnet along its supporting shelf; moving the magnet toward the disk shaft decreases the time, while moving it away increases the time.

Pickup Test

Use rated frequency for both the pickup and time tests.

Set the relay at the 0.5 time-dial position and 2.0 ampere tap. Using the test connections in Figure 13, the main unit should close its contacts within ±2.0% of tap value current (1.96-2.04 amp). All other tap positions should pick up at tap value ±5% of tap value.

Time Test

Set the relay at No. 5 time-dial setting and 2.0 amp tap. Using the test connection in Figure 13, apply five times tap current (10.0 amp) to the relay. The relay should operate in 1.78 seconds ±0.09 second. At 2 times tap current and 10 times tap current, the operating time should agree with the time-curve value ±7%.

INSTANTANEOUS UNIT

Make sure that the instantaneous unit is wired for the range in which it is to operate (see Internal-Connections Diagram Figure 5 or Figure 7) and connected as indicated in test circuit Figure 13. Whenever possible, use the higher range, since the higher range has a higher continuous rating.

Setting the Instantaneous Unit

Loosen the locknut and turn the pole piece toward the desired setting. See Figure 2. Turning the pole piece up increases the pickup; turning the pole piece down decreases the pickup. Bring up the current slowly until the unit picks up. It may be necessary to repeat this operation until the desired pickup value is obtained. Once the desired pickup value is reached, tighten the locknut.

CAUTION

The instantaneous unit is rated 1.5 times minimum pick up. Do not leave the test current on too long as it may damage the unit.

Pickup Test

With the unit connected for high-range operation (parallel connections) and the target in the "Down" position, check the pickup at the maximum calibration mark; the pickup should be within the limits in Table X.

TABLE X

UNIT RANGE AMPERES	MINIMUM AMPERES	CALIBRATION AMPERES	MAXIMUM AMPERES
0.5 - 4.0	3.6	4.0	4.5
2.0 - 16.0	14.4	16.0	17.7
10.0 - 80.0	72.0	80.0	89.0
20.0 - 160.0	144.0	160.0	177.0

TARGET AND SEAL-IN UNIT

The target and seal-in unit has an operating coil tapped at 0.2 and 2.0 amperes. The relay is shipped from the factory with the tap screw in the lower-ampere position. The tap screw is the screw holding the right-hand stationery contact. To change the tap setting, first remove one screw from the left-hand stationary contact and place it in the desired tap. Next, remove the screw from the first, undesired, tap and place it on the left hand stationary contact where the first screw was removed. See Figure 2. This procedure is necessary to prevent the right-hand stationary contact from getting out of adjustment. Screws should never be left in both taps at the same time.

Pickup and Dropout Test

1. Connect relay studs 1 and 2 (See Internal-Connections Diagram) to a DC source, ammeter and load box so that the current can be controlled over a range of 0.1 to 2.0 amperes.

2. Turn the time dial to the ZERO (0) TIME DIAL position.

3. Increase the current slowly until the seal-in unit picks up. See Table XI.

4. Move the time dial away from the ZERO TIME-DIAL position; the seal-in unit should remain in the picked-up position.

5. Decrease the current slowly until the seal-in unit drops out. See Table XI.

TABLE XI

TAP	PICK-UP CURRENT	DROPOUT CURRENT
0.2	0.14 - 0.195	.050 OR MORE
2.0	1.40 - 1.95	.50 OR MORE

INSTALLATION

The following tests are to be performed at the time of installation.

TIME-OVERCURRENT UNIT

1. Set the tap screw in the desired tap. Using the test circuit in Figure 13, apply approximately twice tap value until contacts just close. Reduce the current until the light in series with the contacts begins to flicker. This value of current is defined as pickup, and should be within 5% of tap value.

2. Check the operating time at TD = 5, tap = 2 or minimum value, and I = 5 times tap current. The operating time should be the time shown on the time-current curve ±7%.

TARGET AND SEAL-IN UNIT

1. Make sure that the tap screw is in the desired tap.

2. Perform pickup and dropout tests, as outlined in the **ACCEPTANCE TESTS** section.

INSTANTANEOUS UNIT

1. Select the desired range by making the proper connections at the rear of the relay (See Internal-Connections Diagram). Whenever possible, be sure to select the higher range since it has a higher continuous rating.

2. Set the instantaneous unit to pick up at the desired current level. See SETTING THE INSTANTANEOUS UNIT in the **ACCEPTANCE TESTS** section.

All the tests described above under Installation Tests must be performed at the time of installation. In addition, If those tests described under the **ACCEPTANCE TESTS** section were not performed prior to installation, it is recommended they be performed at this time.

PERIODIC CHECKS AND ROUTINE MAINTENANCE

In view of the vital role of protective relays in the operation of a power system, it is important that a periodic test program be followed. It is recognized that the interval between periodic checks will vary depending upon environment, type of relay and the user's experience with periodic testing. Until the user has accumulated enough experience to select the test interval best suited to his individual requirements, it is suggested that the points listed below be checked at an interval of from one to two years.

These tests are intended to make sure that the relays have not deviated from their original setting. If deviations are encountered, the relay must be retested and serviced as described in this manual.

TIME-OVERCURRENT UNIT

1. Perform Pickup Test as described in the **ACCEPTANCE TESTS** section for the tap in service.

2. Perform the Time Test as described in the **ACCEPTANCE TESTS** section.

INSTANTANEOUS UNIT

1. Check that the instantaneous unit picks up at the desired current level, as outlined in the **ACCEPTANCE TESTS** section.

TARGET AND SEAL-IN UNIT

1. Check that the unit picks up at the values shown in table XI.

2. Check that the unit drops out at 30% or more of tap value.

CONTACT CLEANING

For cleaning relay contacts, a flexible burnishing tool should be used. This consists of a flexible strip of metal with an etch-roughened surface, resembling in effect a superfine file. The polishing action is so delicate that no scratches are left, yet it will clean off any corrosion thoroughly and rapidly. Its flexibility ensures the cleaning of the actual points of contact. Do not use knives, files, abrasive paper or cloth of any kind to clean relay contacts.

SYSTEM TEST

Although this Instruction Book is primarily written to check and set the IAC relay, overall functional tests to check the system operation are recommended at intervals based on the customer's experience.

SERVICING

TIME-OVERCURRENT UNIT

If it is found during installation or periodic testing that the time-overcurrent unit is out of limits, the unit may be recalibrated as follows:

Pickup Tests:

The pickup of the unit for any current tap is adjusted by means of a spring-adjusting ring. The ring may be turned by inserting a screw driver in the notches around the edge. By turning the ring, the operating current of the unit may be brought into agreement with the tap setting employed if, for some reason, this adjustment has been disturbed. This adjustment also permits any desired setting intermediate between the various tap settings to be obtained. The unit is adjusted at the factory to close its contacts from any time-dial position at a minimum current within five percent (5%) of the tap plug setting. The unit resets at 90% of the minimum closing value.

Rotate the time dial to the No. 0 time-dial setting and check, by means of a lamp in the circuit, that the contacts just close.

The point at which the contacts just close can be adjusted by running the stationary contact brush in or out by means of its adjusting screw. This screw should be held securely in its support.

With the contacts just closing at No. 0 time-dial setting, there should be sufficient gap between the stationary contact brush and its metal backing strip to ensure approximately 1/32" wipe.

Connect the operating-coil terminals to a source of the proper frequency and good wave form, having a voltage of 120 or more, with pure resistance load boxes for setting the current. See Test-Circuit Figure 13.

With the tap plug in the 2 amp tap and the time dial set where contacts are just open, adjust the control spring to just close the contacts within the limits given below, which are plus and minus 2 percent (±2%) of tap amps. See Table XII.

TABLE XII

TAP RANGE	TAP	MINIMUM AMPS	MAXIMUM AMPS
0.5 - 4.0	2 AMP	1.96	2.04
2.0 - 16.0	2 AMP	1.96	2.04

It should never be necessary to wind up the control-spring adjuster more than 30° (one notch) or unwind it more than 90° (three notches) from the factory setting to obtain the above pick up setting.

With the tap plug in the 2 amp tap and the time dial at No. 10 time setting, check the current required to just move the disk away from the stop arm. This current should be within the limits shown in Table XIII, which are ±6% of tap amperes. If the disk moves at the lower limit, check that the movement is not over one-half inch (1/2") measured along the periphery of the disk.

TABLE XIII

TAP RANGE	TAP	MINIMUM AMPS	MAXIMUM AMPS
0.5 - 4.0	2 AMP	1.88	2.12
2.0 - 16.0	2 AMP	1.88	2.12

Time Tests

With the tap plug in the 2 amp tap and the time dial at No. 5 time setting, apply five times (5x) tap current to the relay.

* Adjust the drag magnet to obtain a closing time as near as possible to 1.78 seconds, but at least between 1.69 and 1.87 seconds. The magnet should be approximately in the middle of its travel. The magnet is adjusted by loosening the nut under the magnet shelf. Moving the magnet in decreases the time. Moving the magnet out increases the time.

When adjusting the drag magnet, be sure the outer edge of the magnet never extends out beyond the cutout in the disk. Be sure the screw clamping the drag magnet to its supporting shelf is tight before proceeding with other time checks. Make sure the drag magnet does not hit the counterweight at any position of the disk.

With the tap plug in the 2 amp tap and the time dial at the No.5 time setting, check the contact closings at 2 and 10 times tap value. These closing times must be within the limits shown on Table XIV.

TABLE XIV

		60HZ		50HZ	
TAP	AMPS	MIN SEC.	MAX SEC.	MIN. SEC.	MAX SEC.
2.0	4.0	3.5.	4.07	3.52	4.06
2.0	20.0	1.19	1.37	1.13	1.31

INSTANTANEOUS UNIT

1. Both contacts should close at the same time.

2. The backing strip should be so formed that the forked end (front) bears against the molded strip under the armature.

*Revised since last issue

3. With the armature against the pole piece, the cross member of the "T" spring should be in a horizontal plane and there should be at least 1/32 inch wipe on the contacts. Check this by inserting a 0.012 inch feeler gage between the front half of the shaded pole and the armature, with the armature held closed. The contacts should close with the feeler gage in place.

TARGET AND SEAL-IN UNIT

Check steps 1 and 2 as described under INSTANTANEOUS UNIT above.

To check the wipe of the seal-in unit, insert a 0.012 inch feeler gage between the plastic residual of the armature and the pole piece, with the armature held closed. The contacts should close with the feeler gage in place.

RENEWAL PARTS

It is recommended that sufficient quantities of renewal parts be carried in stock to enable the prompt replacement of any that are worn, broken, or damaged.

When ordering renewal parts, address the nearest Sales Office of the General Electric Company, specify the quantity required and the name of the part wanted, and the complete model number of the relay for which the part is required.

Since the last edition, changes have been made in ELECTRICAL TESTS/TIME-OVERCURRENT UNIT/Time Test, and INSTALLATION/TIME-OVERCURRENT UNIT, step 2.

LIST OF FIGURES

FIGURE		PAGE
1	Cutaway of Drawout Case Showing Position of Auxiliary Brush and Shorting Bar	20
2	Type IAC51 800 Series Relay Removed from Case (Front View)	21
3	Type IAC51 800 Series Relay Removed from Case (Rear View)	22
4	Type IAC51A 800 Series Relay Internal Connections (Front View)	23
5	Type IAC51B 800 Series Relay Internal Connections (Front View)	24
6	Type IAC52A 800 Series Relay Internal Connections (Front View)	25
7	Type IAC52B 800 Series Relay Internal Connections (Front View)	25
8	Time/Current Characteristics of the Instantaneous Unit	26
9	Time/Current Characteristics of 50Hz Types IAC51 and IAC52 800 Series Relays	27
10	Time/Current Characteristics of 60Hz Types IAC51 and IAC52 800 Series Relay	28
11	Saturation Curves of Lowest Taps of the Induction Unit of Type-IAC Relays with Inverse-Time Characteristics	29
12	Outline and Panel Drilling for Types IAC51A, IAC51B, IAC52A, and IAC52B 800 Series Relays	30
13	Test Connections for Testing Pickup and Time Curves of IAC Relays	31
14	External Connections of Four IAC51A Relays Used for Multi-Phase and Phase-to-Ground Fault Protection of a 3-Phase Circuit	32
15	External Connections of Four IAC52A Relays Protecting a 3-Phase Circuit Against Multi-Phase and Phase-to-Ground Faults	33

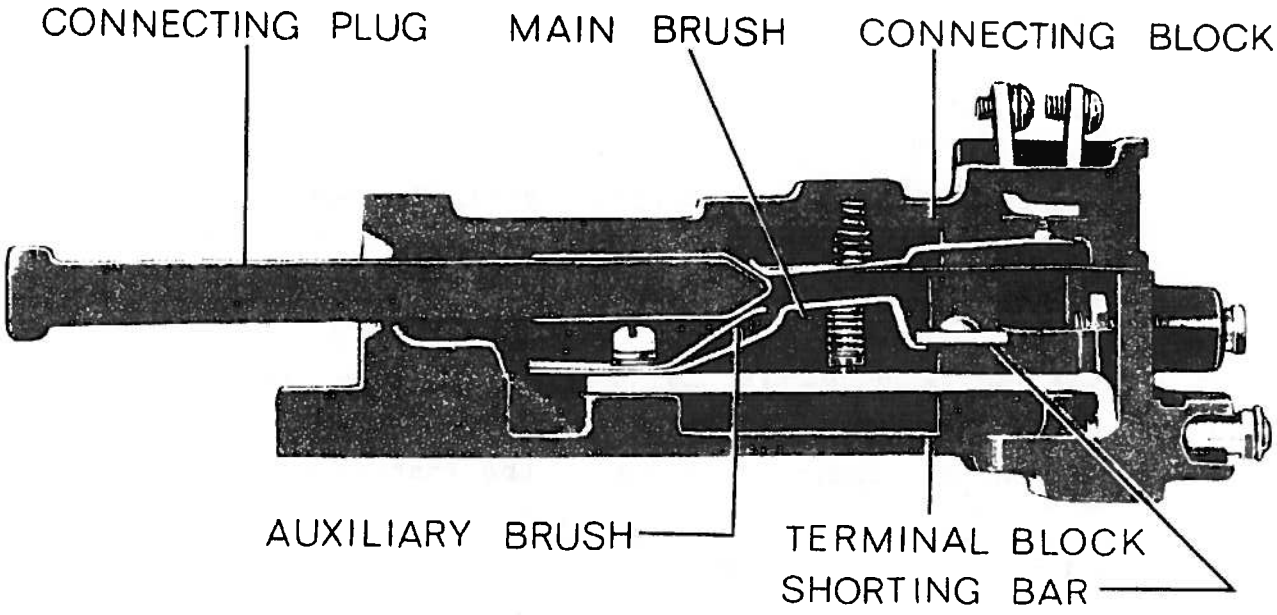

NOTE: AFTER ENGAGING AUXILIARY BRUSH, CONNECTING PLUG TRAVELS ¼ INCH BEFORE ENGAGING THE MAIN BRUSH ON THE TERMINAL BLOCK

Figure 1 (8025039) Cutaway of Drawout Case Showing Position of Auxiliary Brush and Shorting Bar

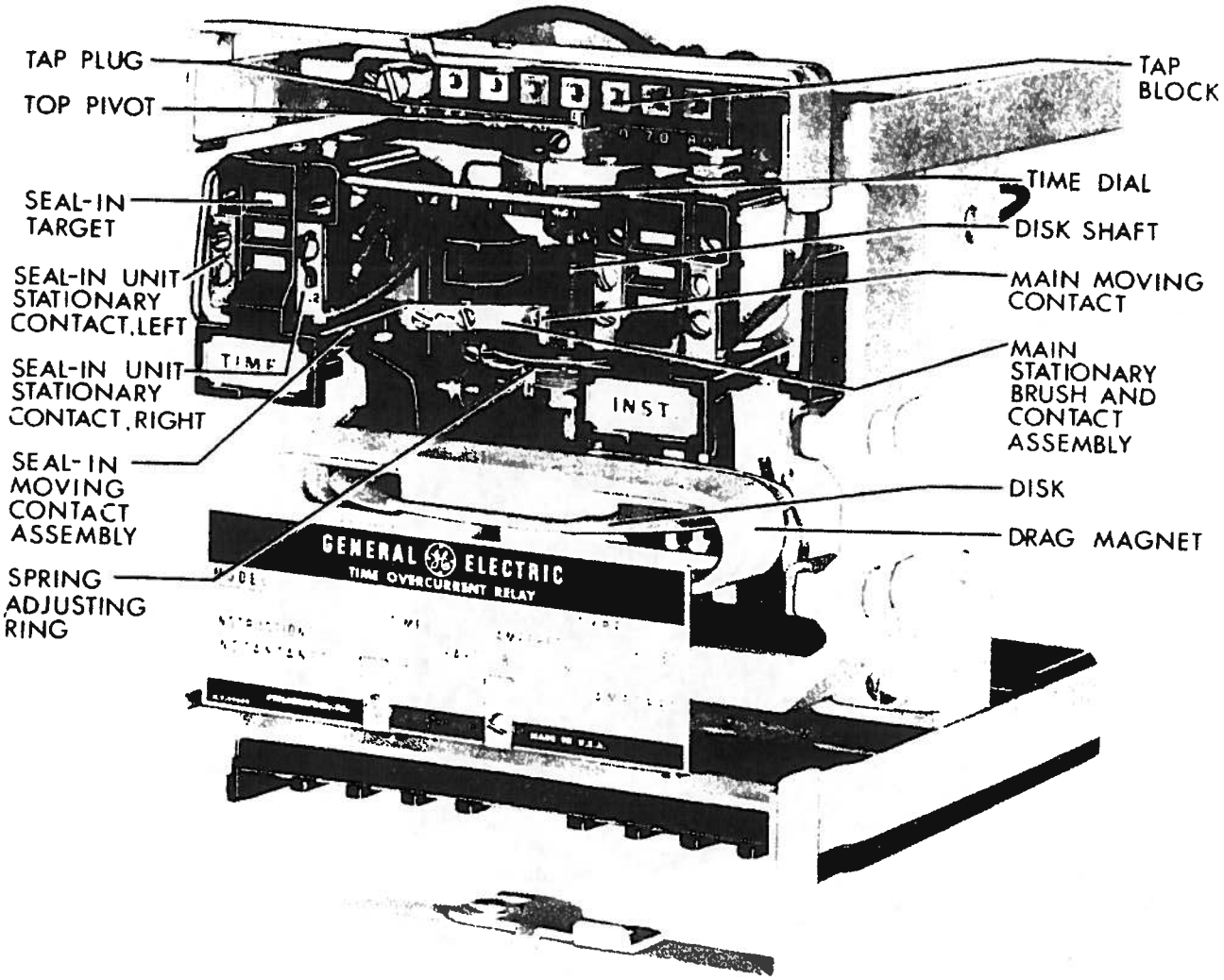

Figure 2 (8041317) Type IAC51 800 Series Relay Removed from Case (Front View)

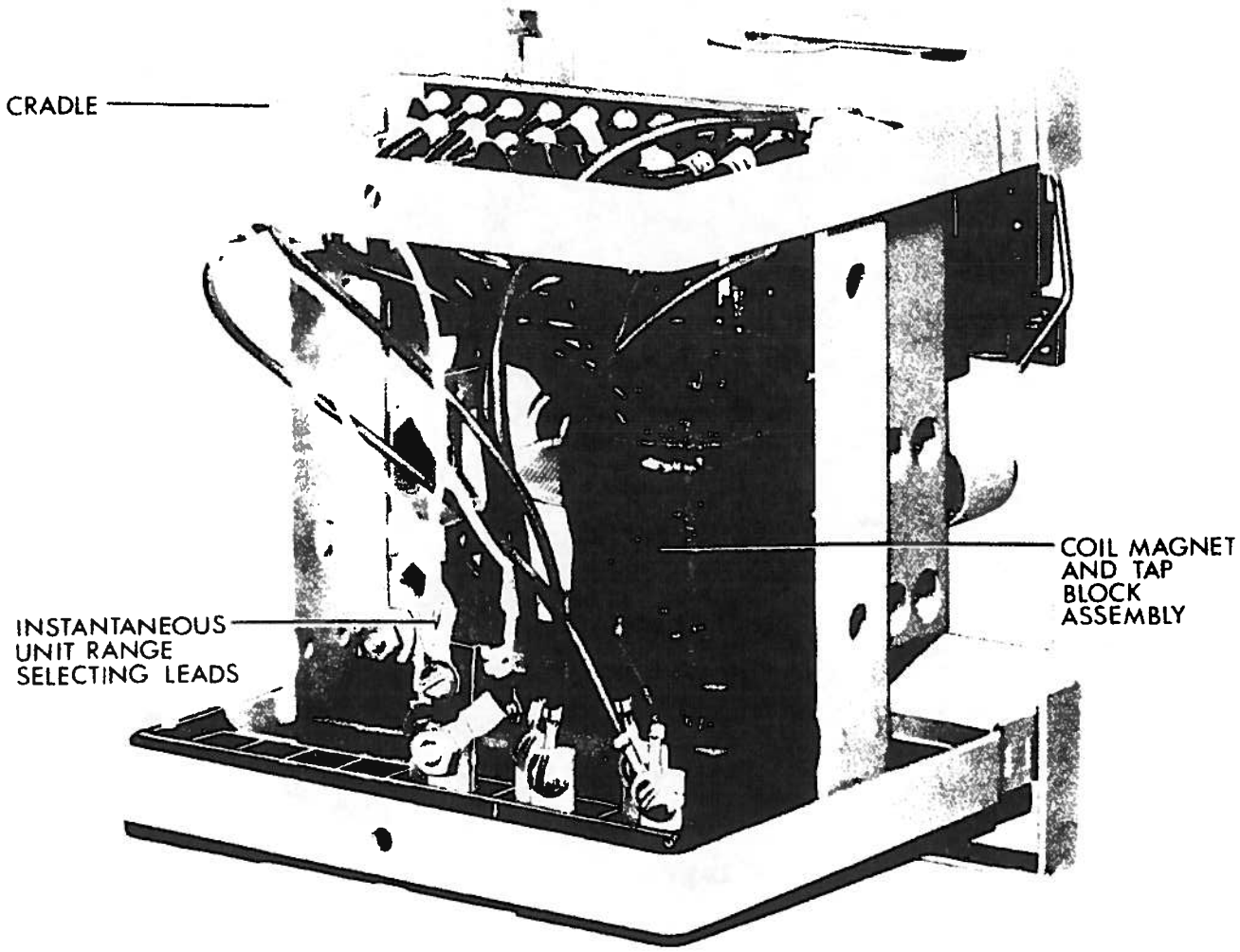

Figure 3 (8041315) Type IAC51 800 Series Relay Removed from Case (Rear View)

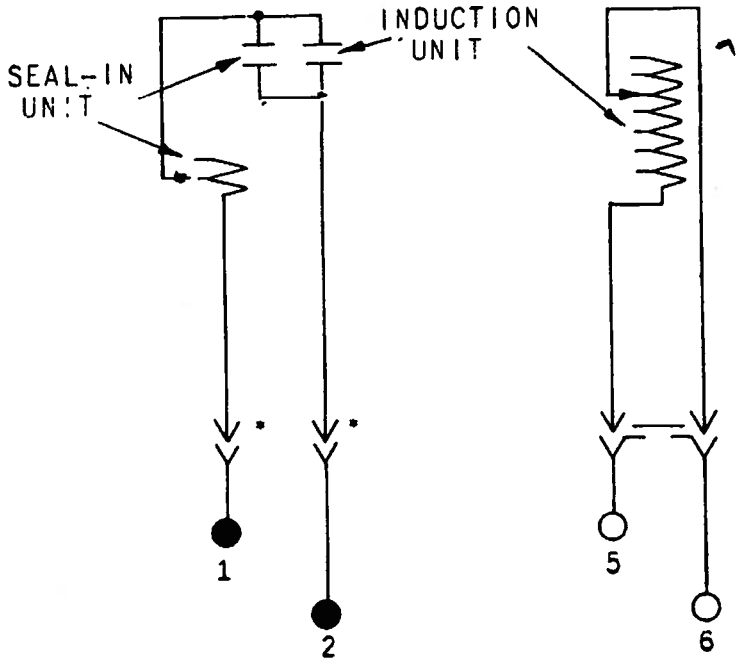

Figure 4 (K-6209658-10) Type IAC51A 800 Series Relay Internal Connections (Front View)

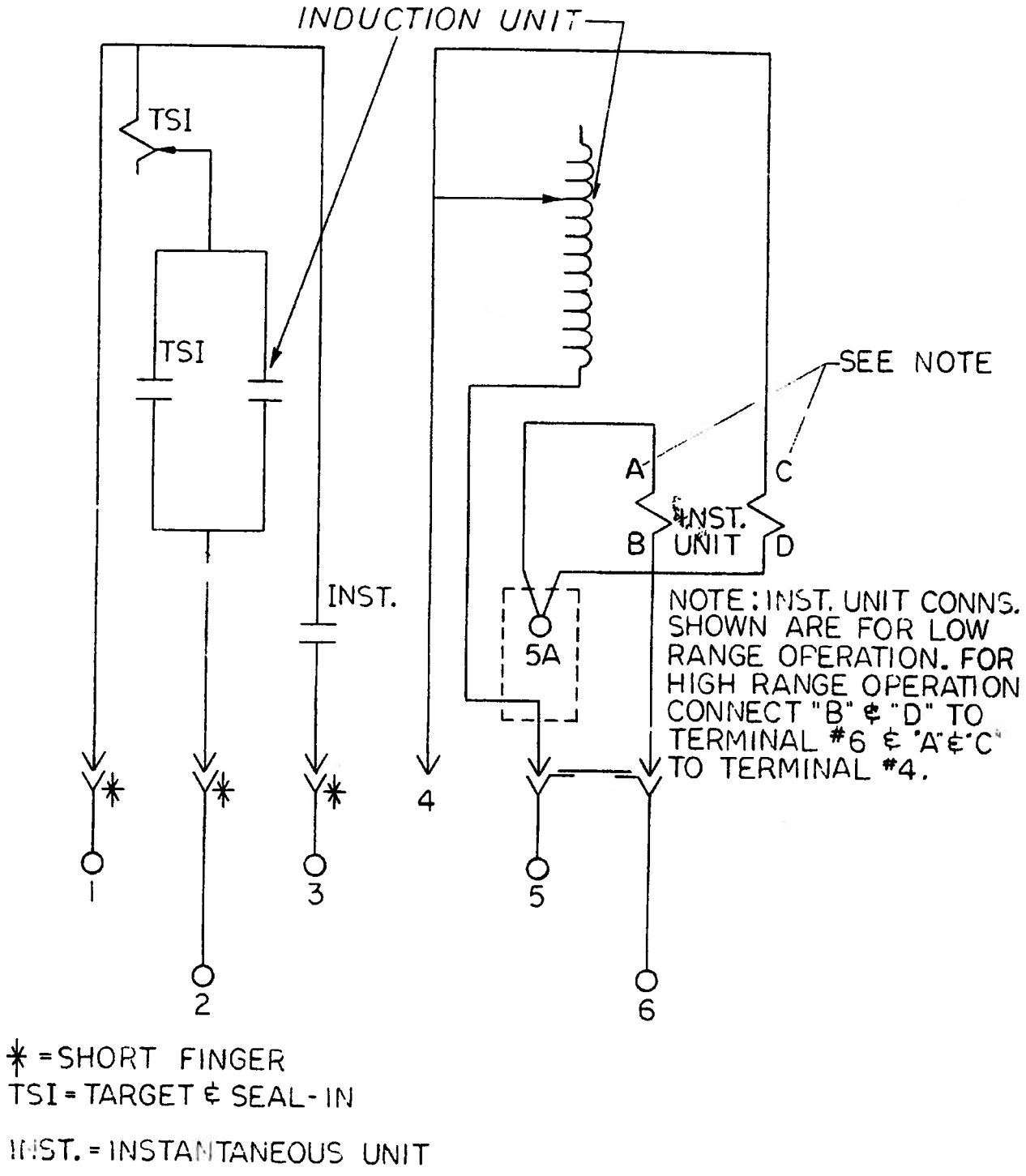

Figure 5 (0227A7196-1) Type IAC51B 800 Series Relay Internal Connections (Front View)

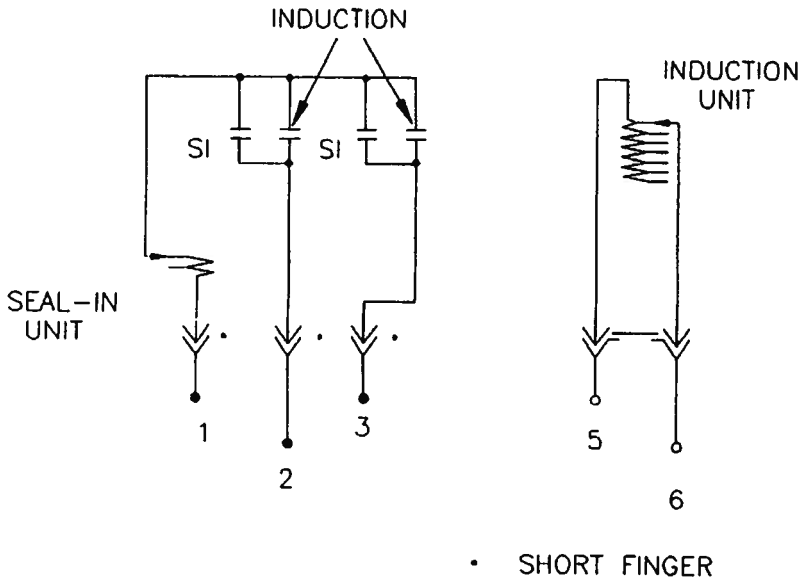

Figure 6 (K-6209662 [5]) Type IAC52A 800 Series Relay Internal Connections (Front View)

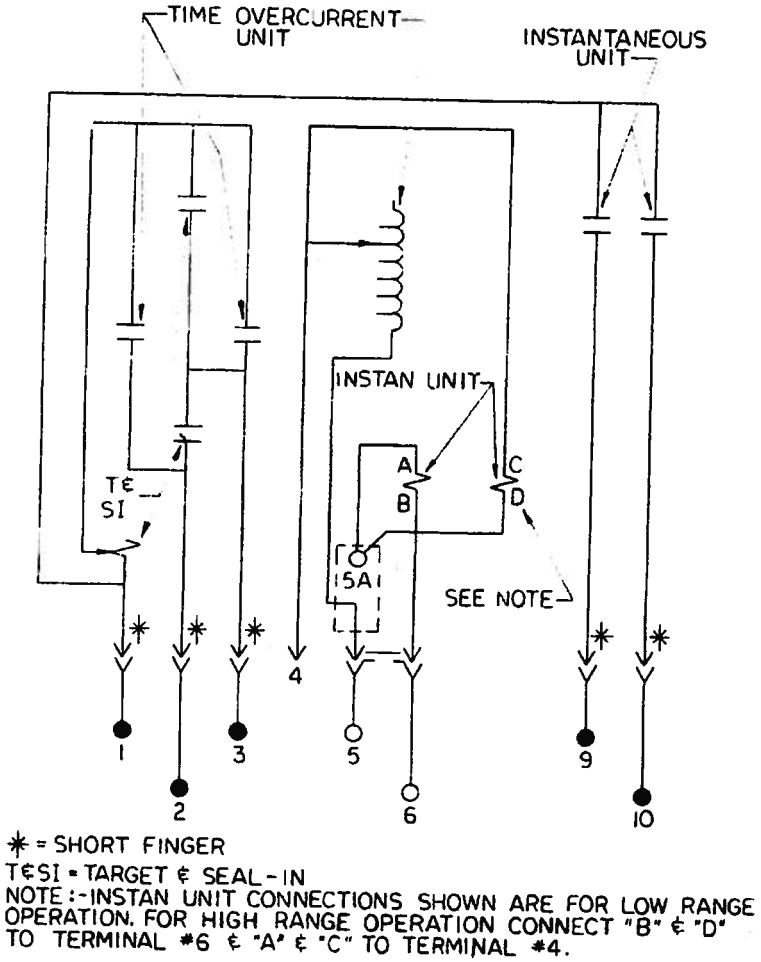

Figure 7 (0246A2285-1) Type IAC52B 800 Series Relay Internal Connections (Front View)

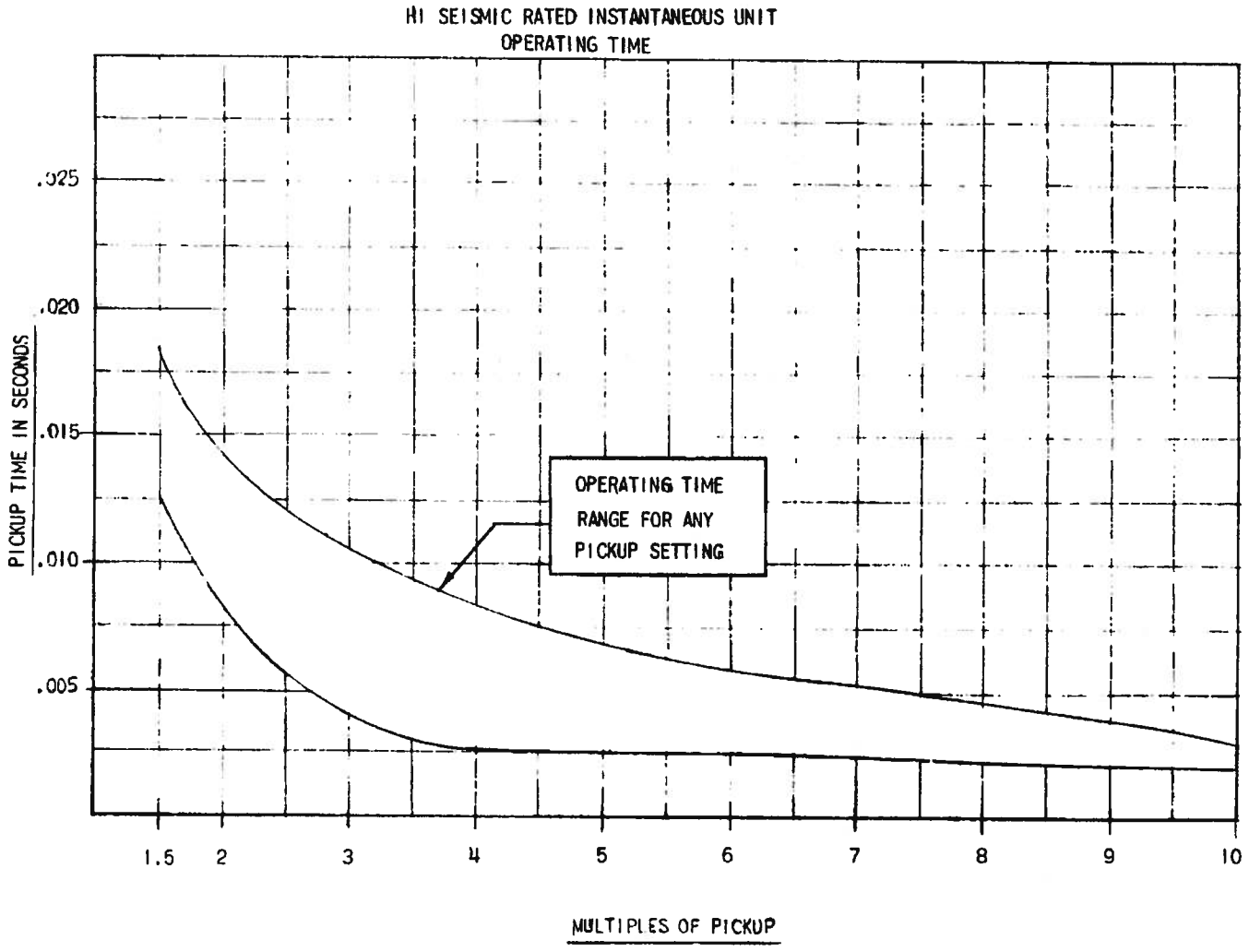

Figure 8 (0208A8695-1) Time/Current Characteristics of the Instantaneous Unit

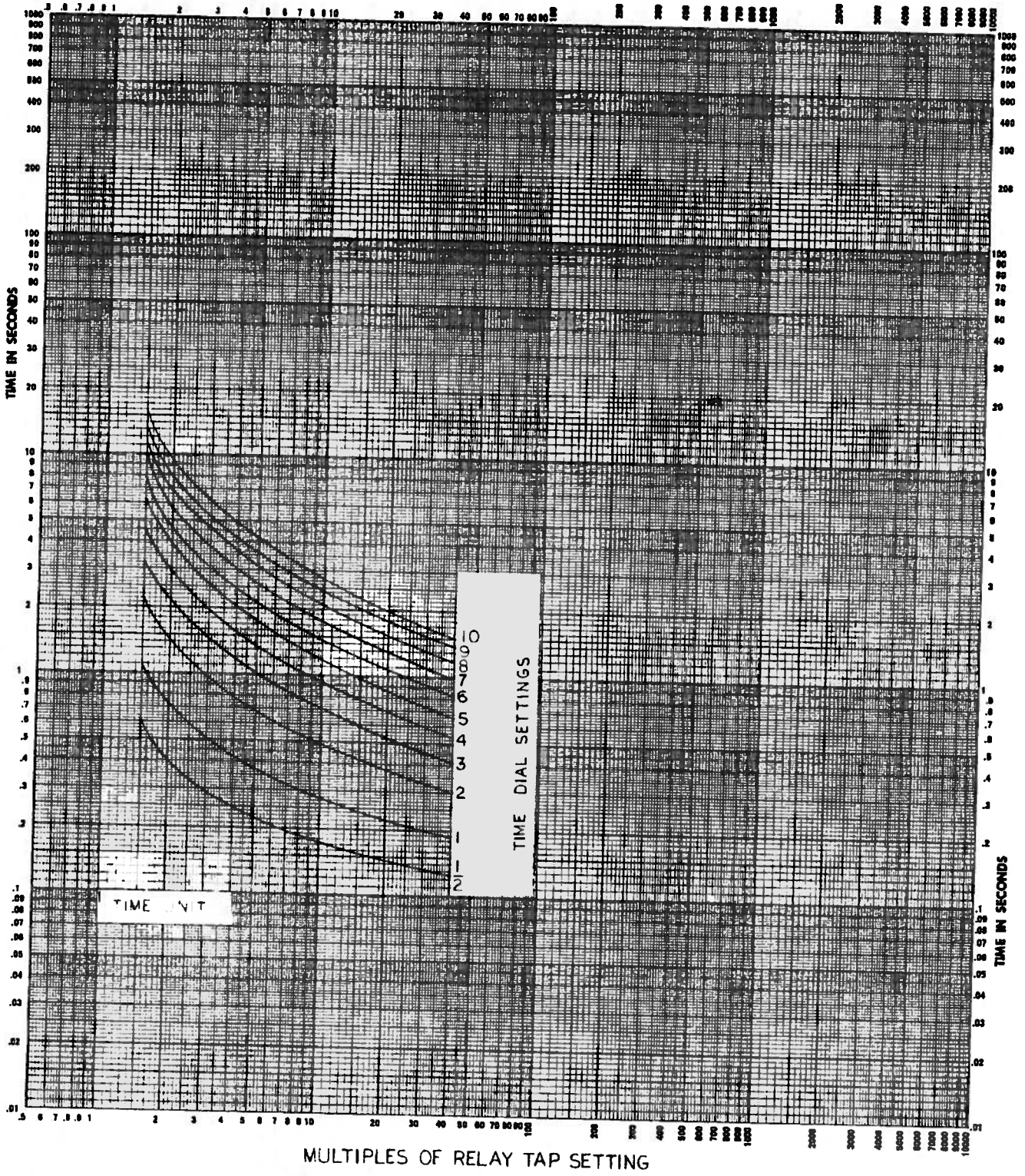

Figure 9 (0108B8938-2) Time/Current Characteristics of 50Hz Types IAC51 and IAC52 800 Series Relays

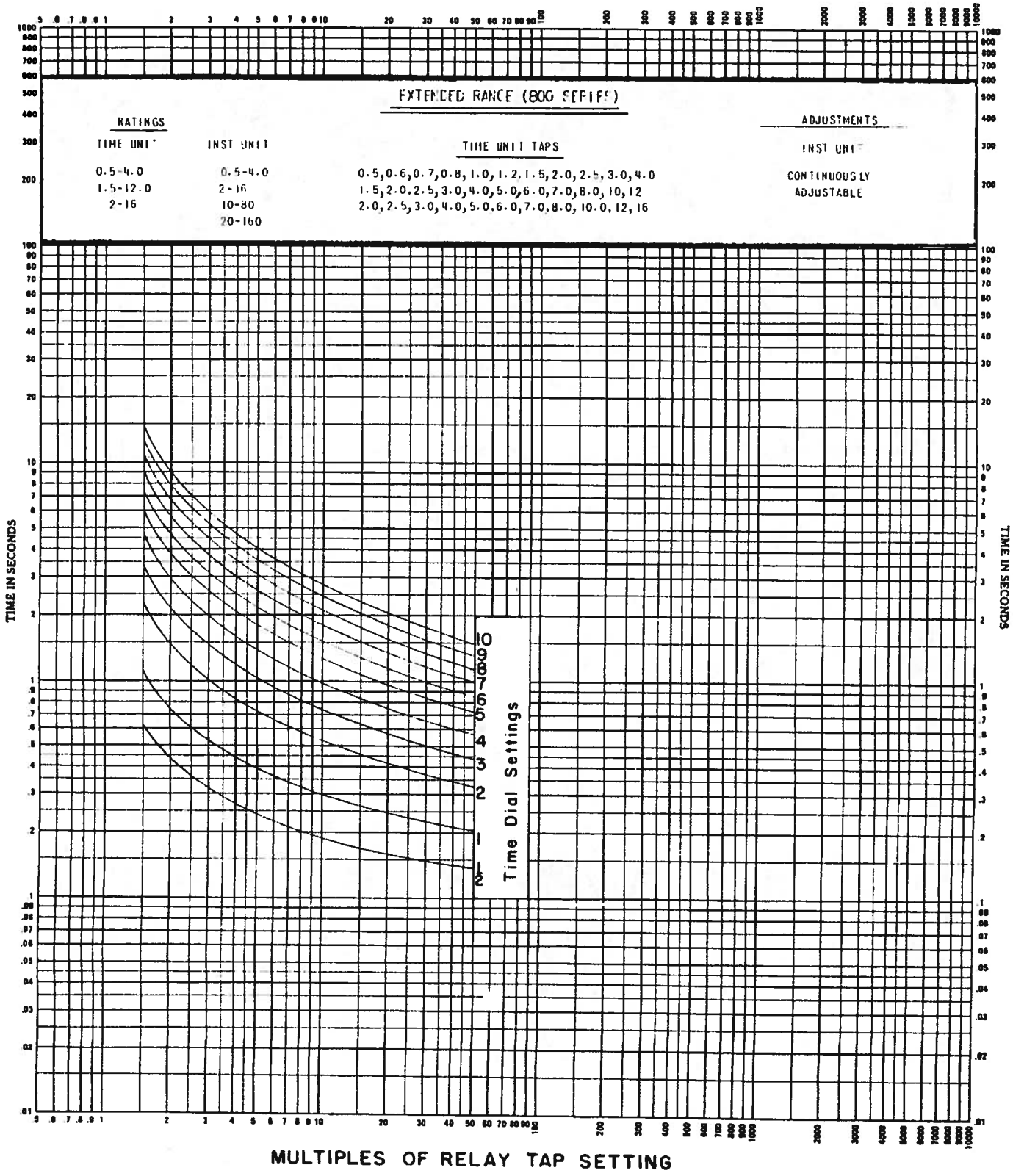

Figure 10 (0888B0269-3) Time/Current Characteristics of 60Hz Types IAC51 and IAC52 800 Series Relay

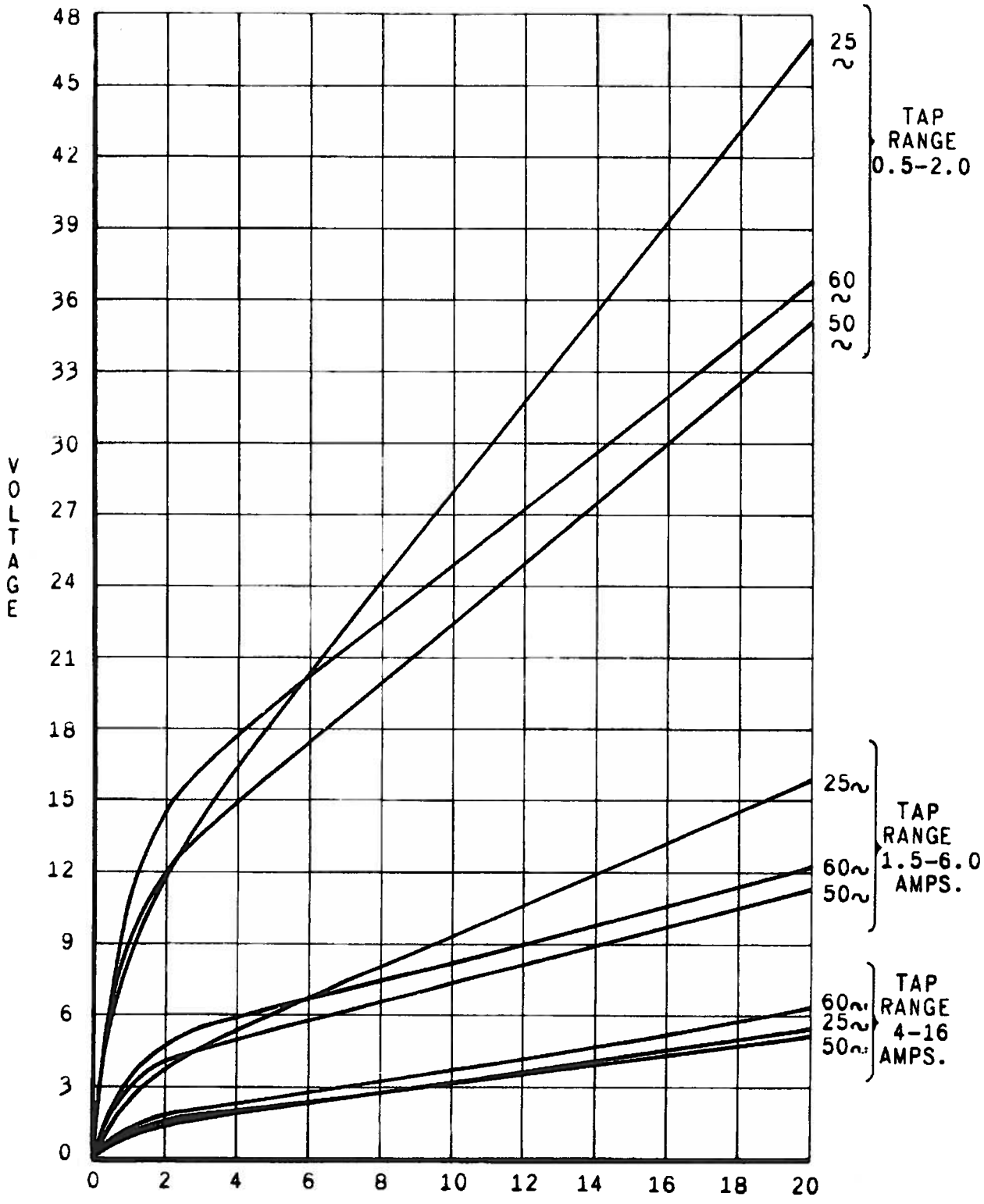

Figure 11 (K-6306891-1) Saturation Curves of Lowest Taps of the Induction Unit of Type-IAC Relays with Inverse-Time Characteristics

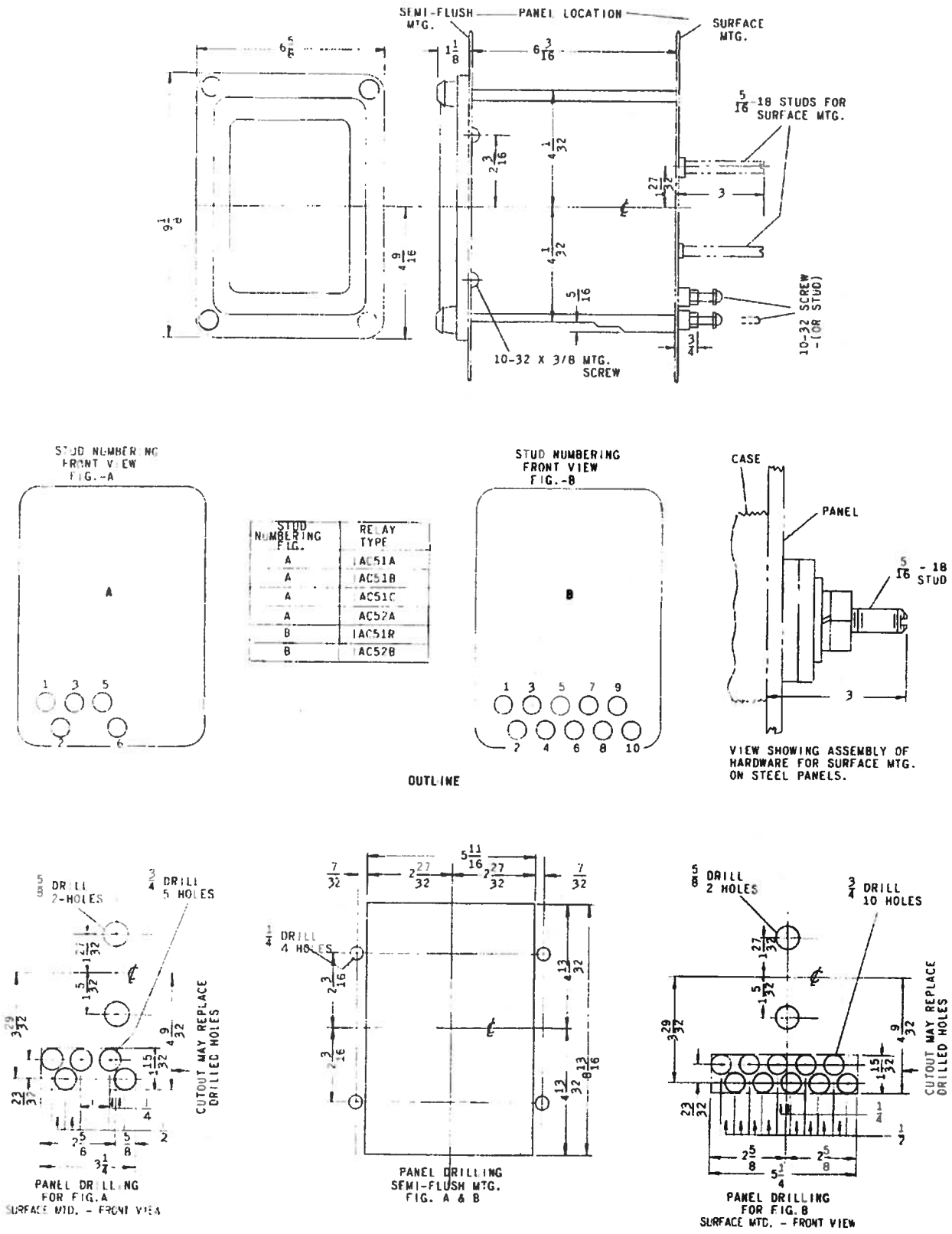

Figure 12 (0237C0707-1) Outline and Panel Drilling for Types IAC51A, IAC51B, IAC52A, and IAC52B 800 Series Relays

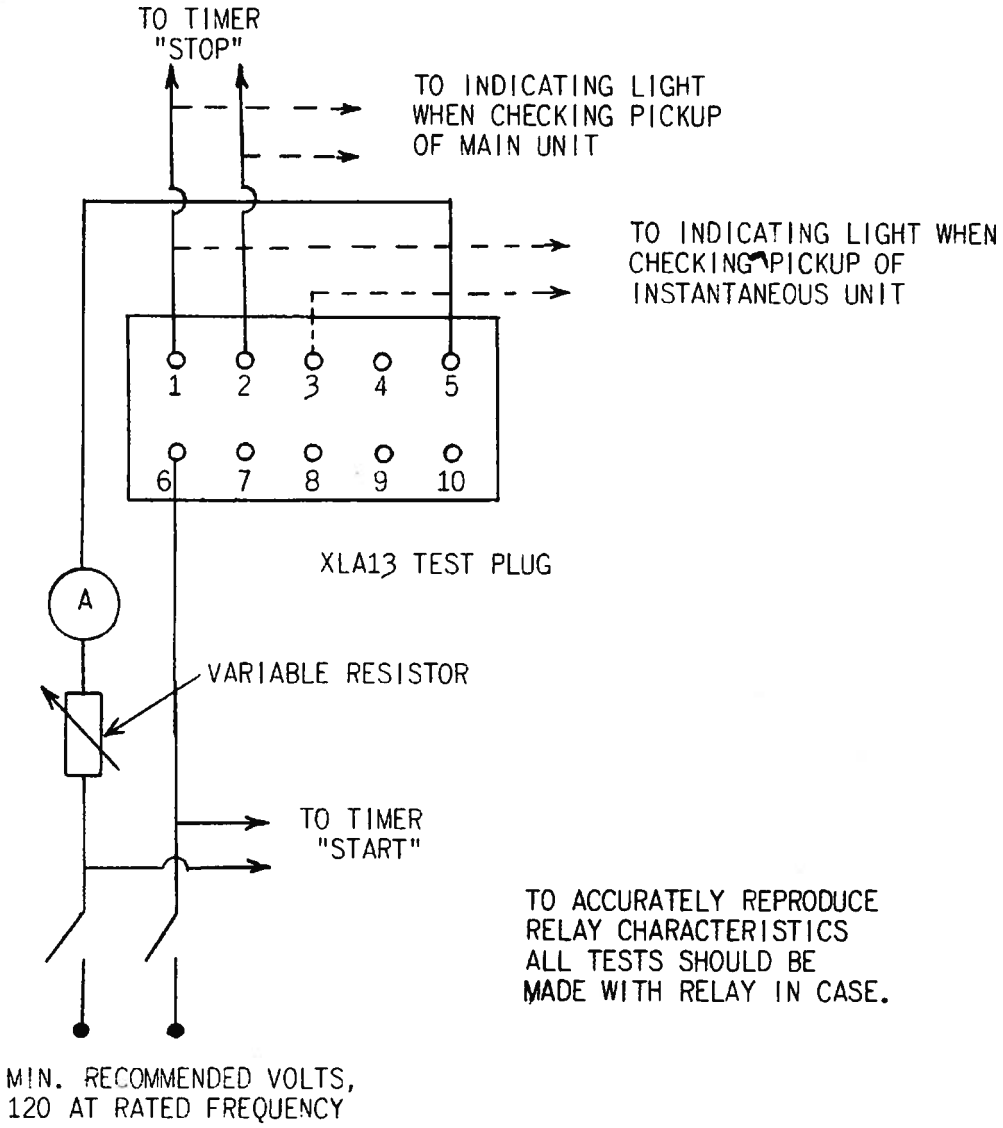

Figure 13 (K-6154399-7) Test Connections for Testing Pickup and Time Curves of IAC Relays

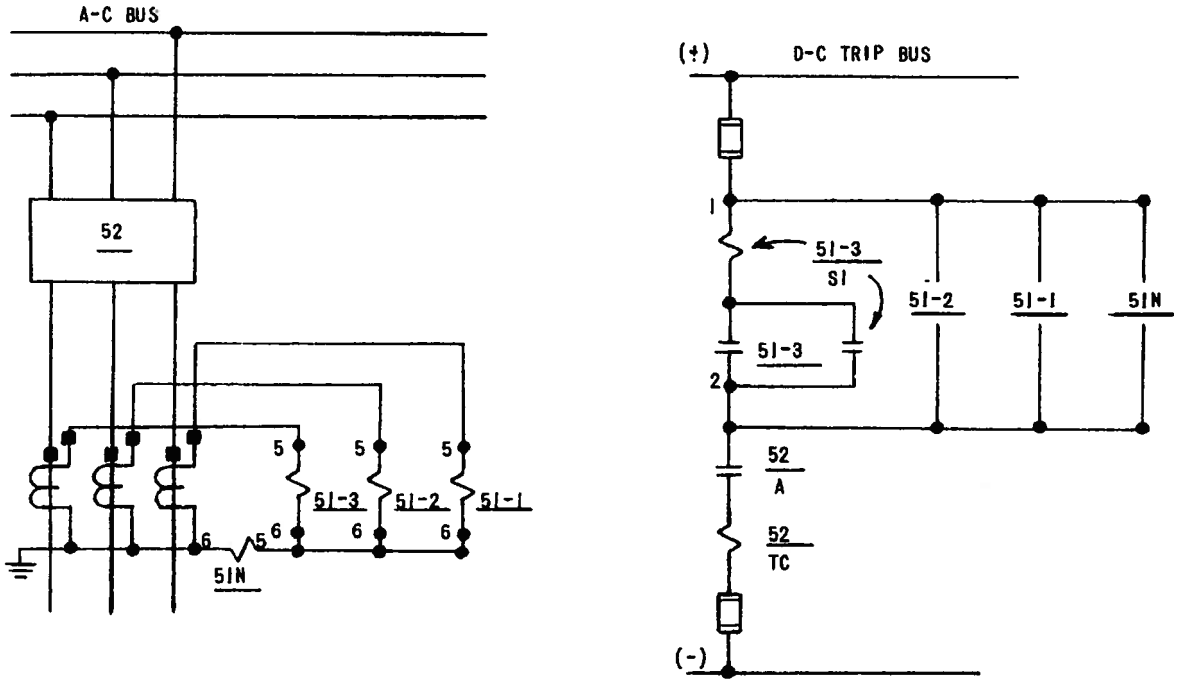

Figure 14 (0246A6966-1) External Connections of Four IAC51A Relays Used for Multi-Phase and Phase-to-Ground Fault Protection of a 3-Phase Circuit

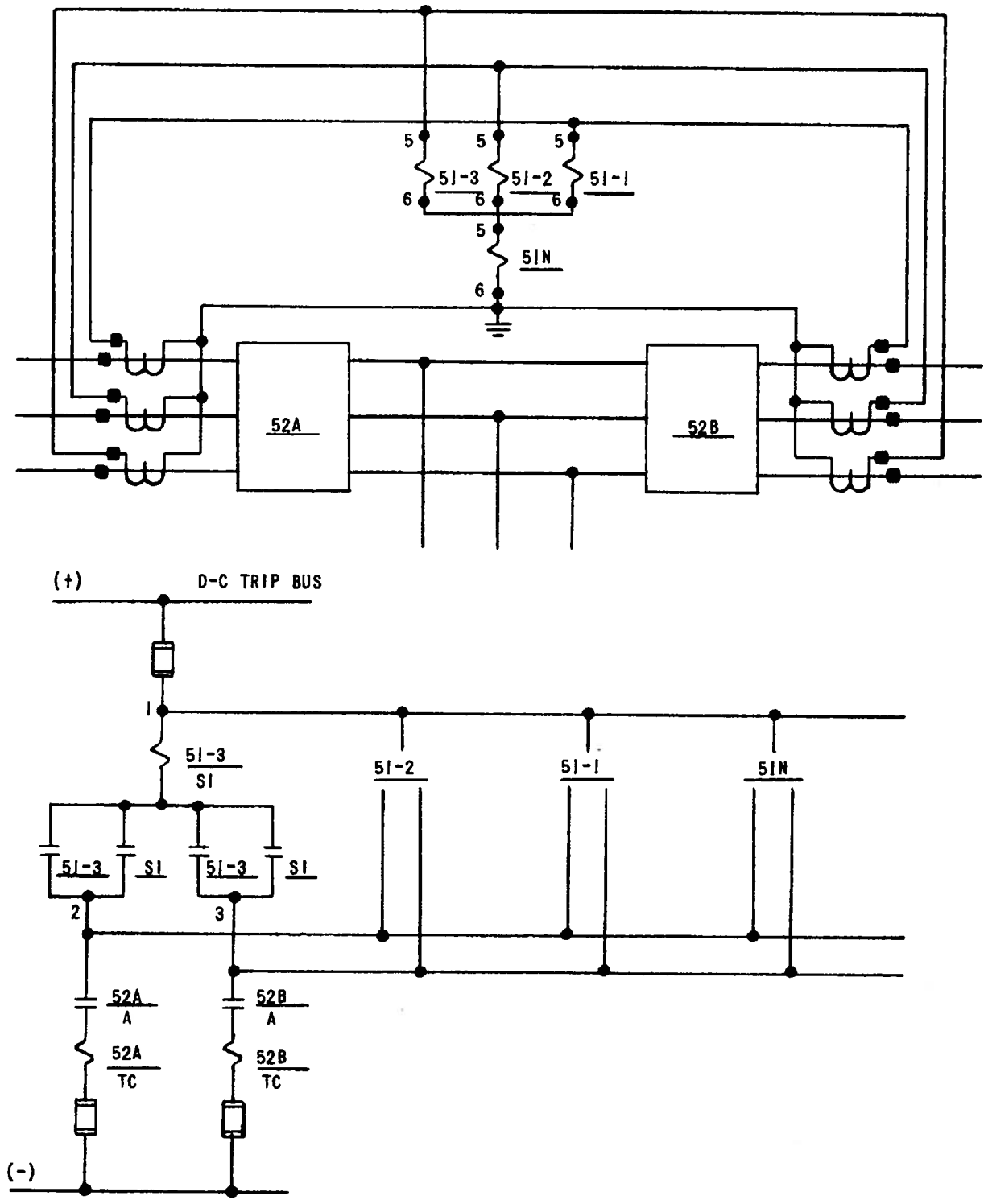

Figure 15 (0246A6967-0) External Connections of Four IAC52A Relays Protecting a 3-Phase Circuit Against Multi-Phase and Phase-to-Ground Faults



GE Power Management

215 Anderson Avenue
Markham, Ontario
Canada L6E 1B3
Tel: (905) 294-6222
Fax: (905) 201-2098
www.ge.com/indsys/pm